Feature

- High stability
- Adjustment-free
- Small size
- Cost-effective

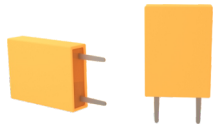

Electrical Specifications

Part Number	Frequency Accuracy (25℃)(KHz)	Stability over Temperature (-20~+80℃)(%)	Resonant Impedance (Ω)	Aging for Ten Years (%)	Load Capacitance	
					C1(pF)	C2(pF)
CRB150~249D	±1	±0.3	≦20	±0.3	330	470
CRB250~374D	±1	±0.3	≦20	±0.3	220	470
CRB375~429P	±2	±0.3	≦20	±0.3	120	470
CRB430~509E	±2	±0.3	≦20	±0.3	100	100
CRB510~699P	±2	±0.3	≦30	±0.3	100	100
CRB700~1500J	±3	±0.3	≦50	±0.3	100	100

Dimension(mm)

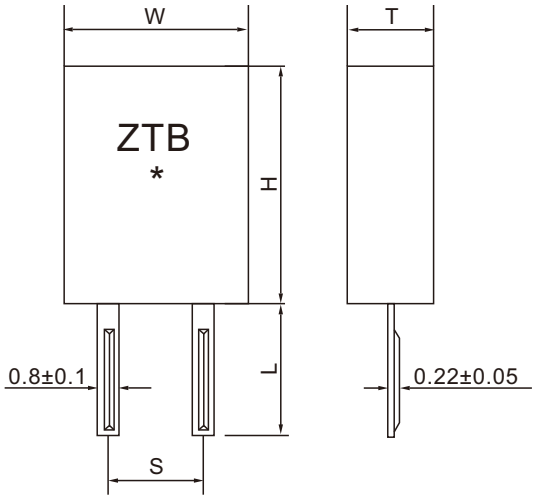

Test Circuit

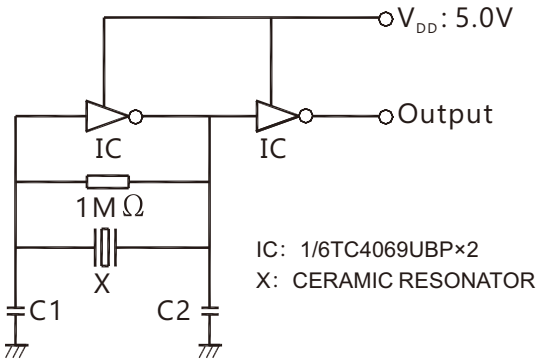

Part Number	W(mm) Width	T(mm) Thickness	H(mm) High	S(mm) Lead Space	L(mm) Lead Length
CRB150~249D	13.5	3.8	14.7	10.0	8.0
CRB250~374D	11.0	3.8	12.2	7.7	7.0
CRB375~429P	7.9	3.6	9.3	5.0	4.0
CRB430~509E	7.0	3.5	9.0	5.0	4.0
CRB510~699P	7.0	3.5	9.0	5.0	4.0
CRB700~1500J	5.2	2.8	6.8	3.5	3.5